环保物料

Pin数	尺寸A	尺寸B
2	5.00	10.00
3	10.00	15.00
4	15.00	20.00
5	20.00	25.00
6	25.00	30.00
7	30.00	35.00
8	35.00	40.00
9	40.00	45.00
10	45.00	50.00
11	50.00	55.00
12	55.00	60.00
13	60.00	65.00
14	66.00	70.00
15	71.00	75.00
16	76.00	80.00
17	81.00	85.00
18	86.00	90.00
19	91.00	95.00
20	96.00	100.00

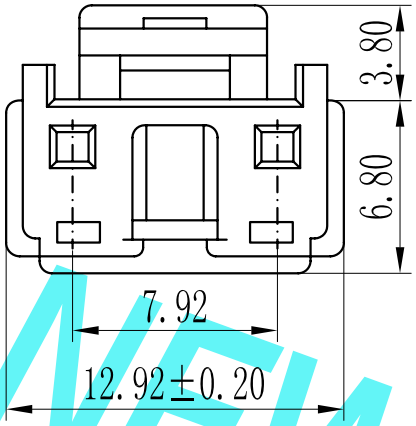

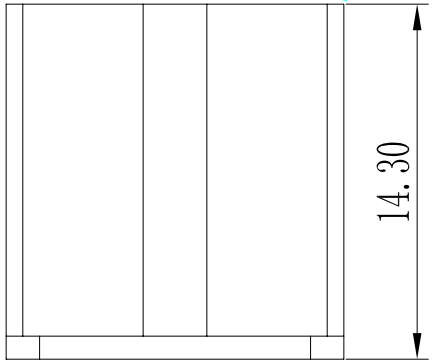

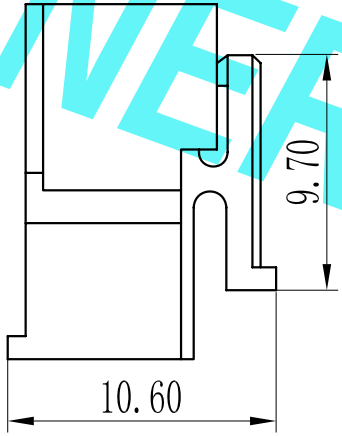

技术参数 SPECIFICATIONS

◆间距：5.0 Pitch:5.0

◆适用线规：AWG#22-#28
Applicable Wire:AWG#22-#28

◆额定电压：AC,DC,250V（有效值）
Voltage rating: AC,DC,250V(rms)

◆额定电流：7A,AC,DC(AWG#24)
Current rating:7A,AC,DC(AWG#24)

◆耐压值：1500V AC/minute
Withstand voltage:1500V AC/minute

◆工作温度 ：-25℃～+85℃
Working Temp:-25℃～+85℃

◆绝缘电阻 ：≥1000MΩ
Insulation resistance:≥1000MΩ

◆接触电阻：≤20mΩ
Contact resistance:≤20mΩ

材料 MATERIAL

◆绝缘体：尼龙66,UL94V-0
Insulator:Nylon66 UL94V-0

KD NEW ENERGY

				GENERAL TOLERANCES		SCALE: 1:1	NAME	DATE	东莞市康导新能源科技有限公司 DONGGUANG KD NEW ENERGY TECHNOLOGY CO.,LTD	PART. NO: 7921-02
				LINEAR	ANGLES	APPROVED			公司网址：www.dgoonne.cn 公司电话：0769-85337633 邮 箱：2850175966@qq.com 公司传真：0769-85392827	
				0.0±0.25	X° REF±6°	DESIGNER				DWG. NO:
A0	新图面发行	2018.12.14	UNIT: MM	0.00±0.15	X° ±3°				TITLE: 5.00mm pitch Single Housing	
REV.	REVISION RECORD	DATE	SIZE: A4	0.000±0.08	X° X'±2°	DRAWN	肖丽娟	2018.12.14		REV: A0 SHEET: 1/1