环保物料

Pin数	尺寸A	尺寸B
4	19.05	26.80
5	25.40	33.15
6	31.75	39.50
7	44.45	52.20
8	50.80	58.55
9	57.15	64.90
10	63.50	71.25
11	69.85	77.60
12	76.20	83.95
13	82.55	90.30
14	88.90	96.65
15	95.25	103.00
16	101.60	109.35
17	107.95	115.70
18	114.30	122.05
19	120.65	128.40
20	127.00	134.75

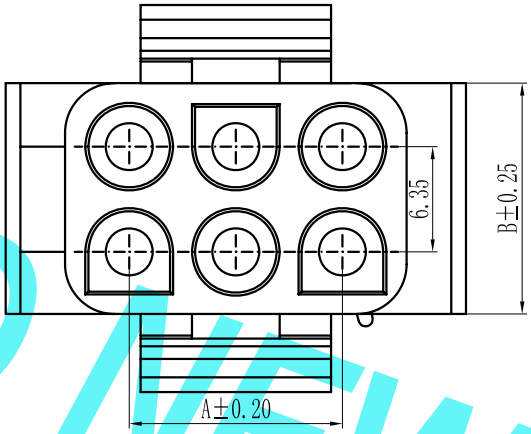

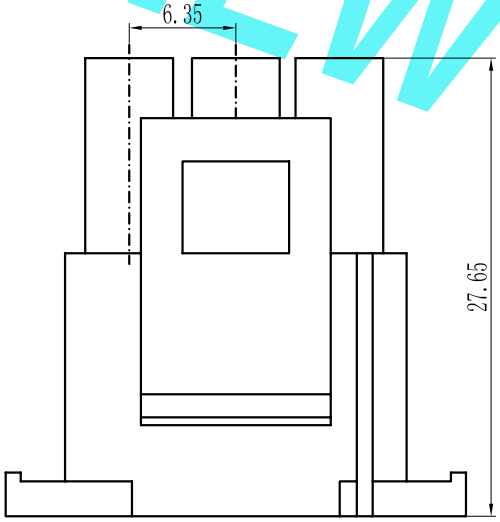

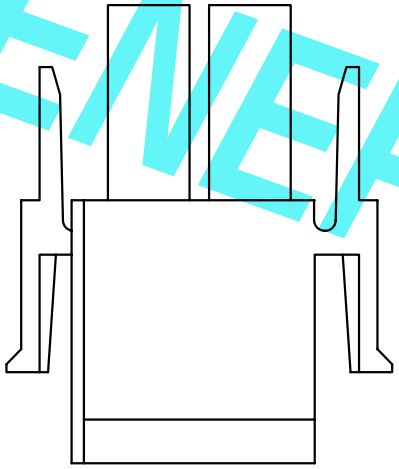

技术参数 SPECIFICATIONS

◆间距：6.35 Pitch:6.35

◆适用线规：AWG#22-#28
Applicable Wire:AWG#22-#28

◆额定电压：AC,DC,1000V (有效值)
Voltage rating: AC,DC,1000V(rms)

◆额定电流：11A,AC,DC(AWG#24)
Current rating:11A,AC,DC(AWG#24)

◆耐压值：1500V AC/minute
Withstand voltage:1500V AC/minute

◆工作温度 ：-25℃～+85℃
Working Temp:-25℃～+85℃

◆绝缘电阻 ：≥1000MΩ
Insulation resistance:≥1000MΩ

◆接触电阻：≤20mΩ
Contact resistance:≤20mΩ

材料 MATERIAL

◆绝缘体：尼龙66,UL94-0
Insulator:Nylon66 UL94-0

KD NEW ENERGY

				GENERAL TOLERANCES		SCALE: 1:1	NAME	DATE	东莞市康导新能源科技有限公司 DONGGUANG KD NEW ENERGY TECHNOLOGY CO.,LTD	PART. NO:	9635F-2×XX
				LINEAR	ANGLES	APPROVED			公司网址：www.dgoonne.cn 公司电话：0769-85337633 邮 箱：2850175966@qq.com 公司传真：0769-85392827		
				0.0±0.25	X° REF±6°	DESIGNER				DWG. NO:	
A0	新图面发行	2018.12.18	UNIT: MM	0.00±0.15	X° ±3°				TITLE: 6.35mm pitch Dual Housing		
REV.	REVISION RECORD	DATE	SIZE: A4	0.000±0.08	X° X'±2°	DRAWN	肖丽娟	2018.12.18		REV: A0	SHEET: 1/1