ROHS

For reference only

Pin数	尺寸A	尺寸B
2×3	4.0	6.0
2×4	6.0	8.0
2×5	8.0	10.0
2×6	10.0	12.0
2×7	12.0	14.0
2×8	14.0	16.0
2×9	16.0	18.0
2×10	18.0	20.0
2×11	20.0	22.0
2×12	22.0	24.0
2×13	24.0	26.0
2×14	26.0	28.0
2×15	28.0	30.0
2×16	30.0	32.0
2×17	32.0	34.0
2×18	34.0	36.0
2×19	36.0	38.0
2×20	38.0	40.0
2×21	40.0	42.0
2×22	42.0	44.0
2×23	44.0	46.0
2×24	46.0	48.0
2×25	48.0	50.0
2×26	50.0	52.0
2×27	52.0	54.0
2×28	54.0	56.0
2×29	56.0	58.0
2×30	58.0	60.0
2×31	60.0	62.0
2×32	62.0	64.0
2×33	64.0	66.0
2×34	66.0	68.0
2×35	68.0	70.0
2×36	70.0	72.0
2×37	72.0	74.0
2×38	74.0	76.0
2×39	76.0	78.0
2×40	78.0	80.0

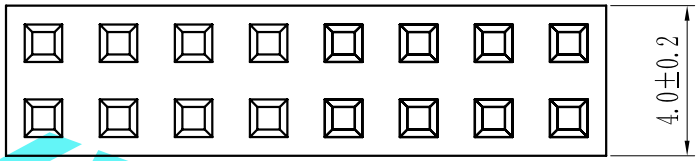

PC
1.8
2.4

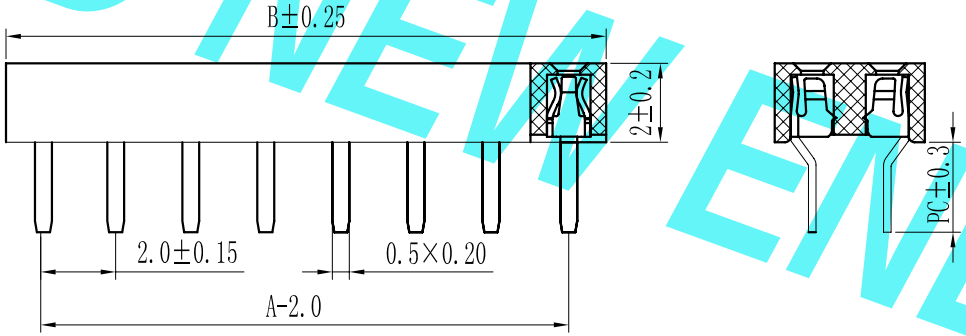

Specification:
Current Rating : 1.5AMP
Temperature Range : -40℃to+105℃
Contact Resistance : 20mΩ Max
Insulation Resistance : 1000MΩ Min
Withstanding Voltage : AC 500V
Material:
Insulator : Polyester (UL94V-0)
Standard:PBT/PA6T/LCP
Contact: Bronze
Plating : Au or Sn Over 50u″ Ni

PCB LAYOUT

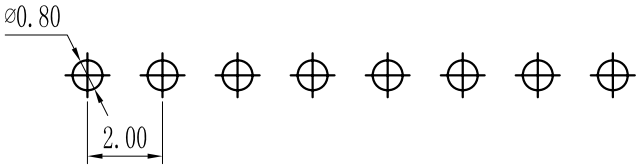

F 20 0D-XXX X X-XX-X-XXX
① ② ③ ④ ⑤ ⑥ ⑦ ⑧ ⑨

① Series No:
P=Pin Header
F=Female Header
B=Box Header
E=Ejector Header

② Pitch:
08=0.80
10=1.00
12=1.27
20=2.00
25=2.54
39=3.96
50=5.08

③ Tail&Mounting Style:
9D=Right Angle DIP Type
9S=Straight SMT Type
0D=Straight DIP Type
0S=Horizontal SMT Type

④ No. of Pins:

Single Row	Double Row
101=1*1Pin	201=2*1Pin
102=1*2Pin	202=2*2Pin
⋮ ⋮	⋮ ⋮
140=1*40pin	240=2*40pin

⑤ Insulator Color:
A:Black B:Brown C:Red
D:Orange E:Yellow F:Green
G:Blue H:Violet J:Gray
K:White P:Light Blue

⑥ Material Type:
A-PBT
B-PA46
C-PA6T
D-PA9T
E-LCP

⑦ Plating Type:
0*-Sn-Au 1*-Ni 2*-Sn 3*-Matte-Tin 5*-Au
0A-Sn-Au 1u″ 0F-Sn-Au 10u″ 5A-Au 1u″
0B-Sn-Au 2u″ 0G-Sn-Au 15u″ 5B-Au 2u″
0C-Sn-Au 3u″ 0H-Sn-Au 30u″ 5C-Au 3u″
0D-Sn-Au 4u″ 0I-Sn-Au 40u″ ⋮
0E-Sn-Au 5u″ 0J-Sn-Au 50u″ 5J-Au 50u″

⑧ RoHS Request:
0:No Request
1:RoHS
2:HF(Halogen Free)

⑨ Customer Code

				GENERAL TOLERANCES		SCALE: 1:1	NAME	DATE
				LINEAR	ANGLES	APPROVED		
				0.0±0.25	X° REF±6°			
			UNIT: MM	0.00±0.15	X° ±3°	DESIGNER		
REV.	REVISION RECORD	DATE	SIZE: A4	0.000±0.08	X° X'±2°	DRAWN		

东莞市康导新能源科技有限公司
DONGGUANG KD NEW ENERGY TECHNOLOGY CO.,LTD.
Web: www.dgconne.com Tel: 0769-85337633
Email: 2850175986@qq.com Fax: 0769-85392827

TITLE: Pitch2.0mm Female Header,Dual Row, Plastic Height 2.0mm,DIP(U)

PART. NO: KDFH-0068

DWG. NO: ENDE1068

REV: A0 SHEET: 1/1

KD NEW ENERGY