ROHS

For reference only

Pin数	尺寸A	尺寸B
2×6	6.35	22.12
2×8	8.89	24.66
2×10	11.43	27.20
2×12	13.97	29.74
2×14	16.51	32.28
2×16	19.05	34.82
2×18	21.59	37.36
2×20	24.13	39.90
2×22	26.67	42.44
2×24	29.21	44.98
2×26	31.75	47.52
2×28	34.29	50.06
2×30	36.83	52.60
2×32	39.37	55.14
2×34	41.91	57.68
2×36	44.45	60.22
2×38	46.99	62.76
2×40	49.53	65.30
2×42	52.07	67.84
2×44	54.61	70.38
2×46	57.15	72.92
2×48	59.69	75.46
2×50	62.23	78.00
2×52	64.77	80.54
2×54	67.31	83.08
2×56	69.85	85.62
2×58	72.39	88.16
2×60	74.93	90.70

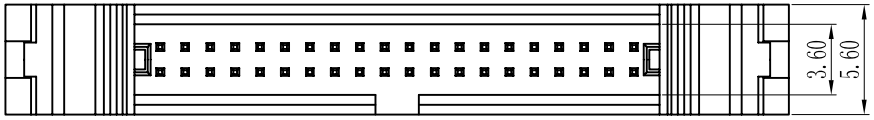

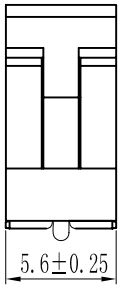

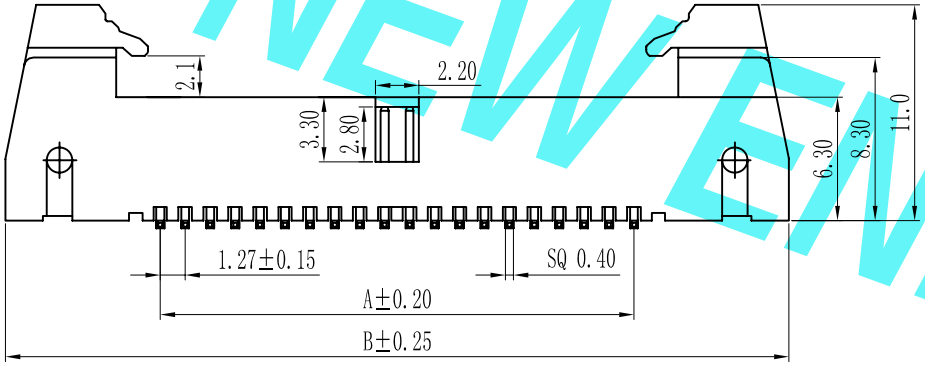

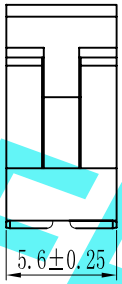

Specification:
Current Rating : 1AMP
Temperature Range : -40℃to+105℃
Contact Resistance : 20mΩ Max
Insulation Resistance : 1000MΩ Min
Withstanding Voltage : AC 500V
Material:
Insulator : Polyester (UL94V-0)
Standard:PA6T/LCP
Contact: Brass
Plating : Au or Sn Over 50u″ Ni

PCB LAYOUT

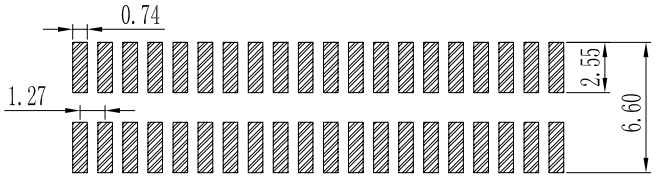

E 12 9S-XXX X X-XX-X-XXX
① ② ③ ④ ⑤ ⑥ ⑦ ⑧ ⑨

① Series No:
P=Pin Header
F=Female Header
B=Box Header
E=Ejector Header

② Pitch:
08=0.80
10=1.00
12=1.27
20=2.00
25=2.54
39=3.96
50=5.08

③ Tail&Mounting Style:
9D=Right Angle DIP Type
9S=Straight SMT Type
0D=Straight DIP Type
0S=Horizontal SMT Type

④ No. of Pins:

Single Row	Double Row
101=1*1Pin	201=2*1Pin
102=1*2Pin	202=2*2Pin
⋮ ⋮	⋮ ⋮
140=1*40pin	240=2*40pin

⑤ Insulator Color:
A:Black B:Brown C:Red
D:Orange E:Yellow F:Green
G:Blue H:Violet J:Gray
K:White P:Light Blue

⑥ Material Type:
A-PBT
B-PA46
C-PA6T
D-PA9T
E-LCP

⑦ Plating Type:
0*-Sn-Au 1*-Ni 2*-Sn 3*-Matte-Tin 5*-Au
0A-Sn-Au 1u″ 0F-Sn-Au 10u″ 5A-Au 1u″
0B-Sn-Au 2u″ 0G-Sn-Au 15u″ 5B-Au 2u″
0C-Sn-Au 3u″ 0H-Sn-Au 30u″ 5C-Au 3u″
0D-Sn-Au 4u″ 0I-Sn-Au 40u″ ⋮
0E-Sn-Au 5u″ 0J-Sn-Au 50u″ 5J-Au 50u″

⑧ RoHS Request:
0:No Request
1:RoHS
2:HF(Halogen Free)

⑨ Customer Code

				GENERAL TOLERANCES		SCALE: 1:1	NAME	DATE
				LINEAR	ANGLES	APPROVED		
				0.0±0.25	X° REF±6°			
			UNIT: MM	0.00±0.15	X° ±3°	DESIGNER		
REV.	REVISION RECORD	DATE	SIZE: A4	0.000±0.08	X° X'±2°	DRAWN		

东莞市康导新能源科技有限公司
DONGGUANG KD NEW ENERGY TECHNOLOGY CO.,LTD.
Web: www.dgconne.com Tel: 0769-85337633
Email: 2850175986@qq.com Fax: 0769-85392827

TITLE:
Pitch1.27mm Ejector Header,Dual Row,
Plastic Height 6.3mm,SMT (with Local Peg) Type

PART. NO: KDEH-0002
DWG. NO: ENDE3002
REV: A0 SHEET: 1/1

KD NEW ENERGY