ROHS

For reference only

Pin数	尺寸A	尺寸B
1×2	2.54	5.48
1×3	5.08	8.02
1×4	7.62	10.56
1×5	10.16	13.10
1×6	12.70	15.64
1×7	15.24	18.18
1×8	17.78	20.72
1×9	20.32	23.26
1×10	22.86	25.80
1×11	25.40	28.34
1×12	27.94	30.88
1×13	30.48	33.42
1×14	33.02	35.96
1×15	35.56	38.50
1×16	38.10	41.04
1×17	40.64	43.58
1×18	43.18	46.12
1×19	45.72	48.66
1×20	48.26	51.20
1×21	50.80	53.74
1×22	53.34	56.28
1×23	55.88	58.82
1×24	58.42	61.36
1×25	60.96	63.90
1×26	63.50	66.44
1×27	66.04	68.98
1×28	68.58	71.52
1×29	71.12	74.06
1×30	73.66	76.60
1×31	76.20	79.14
1×32	78.74	81.68
1×33	81.28	84.22
1×34	83.82	86.76
1×35	86.36	89.30
1×36	88.90	91.84
1×37	91.44	94.38
1×38	93.98	96.92
1×39	96.52	99.46
1×40	99.06	102.00

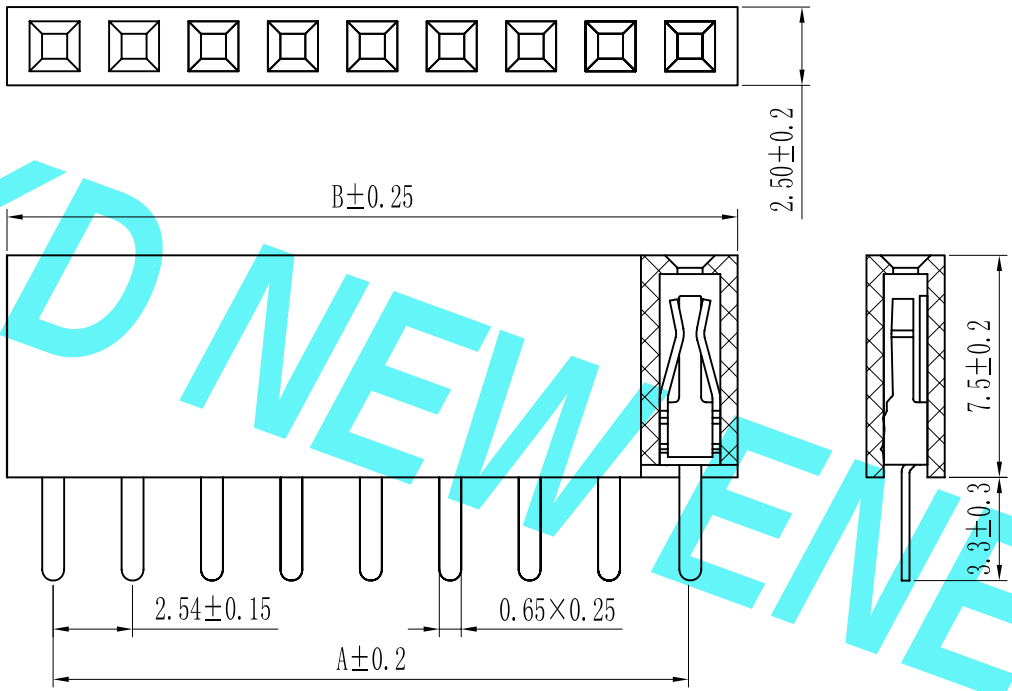

Specification:
Current Rating : 3AMP
Temperature Range : -40℃to+105℃
Contact Resistance : 20mΩ Max
Insulation Resistance : 1000MΩ Min
Withstanding Voltage : AC 1000V
Material:
Insulator : Polyester (UL94V-0)
Standard:PBT/PA6T/LCP
Contact: Bronze
Plating : Au or Sn Over 50u″ Ni

KD NEW ENERGY

PCB LAYOUT

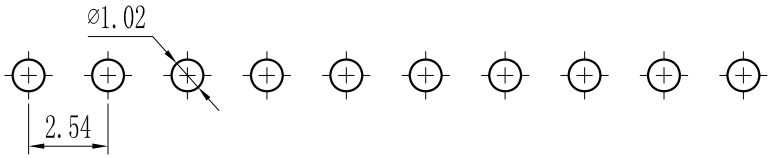

F 25 0D-XXX X X-XX-X-XXX
① ② ③ ④ ⑤ ⑥ ⑦ ⑧ ⑨

① Series No:
P=Pin Header
F=Female Header
B=Box Header
E=Ejector Header

② Pitch:
08=0.80
10=1.00
12=1.27
20=2.00
25=2.54
39=3.96
50=5.08

③ Tail&Mounting Style:
0D=Right Angle DIP Type
0S=Straight SMT Type
0D=Straight DIP Type
0S=Horizontal SMT Type

④ No. of Pins:
Single Row / Double Row
101=1*1Pin / 201=2*1Pin
102=1*2Pin / 202=2*2Pin
⋮ ⋮ / ⋮ ⋮
140=1*40pin / 240=2*40pin

⑤ Insulator Color:
A:Black B:Brown C:Red
D:Orange E:Yellow F:Green
G:Blue H:Violet J:Gray
K:White P:Light Blue

⑥ Material Type:
A-PBT
B-PA46
C-PA6T
D-PA9T
E-LCP

⑦ Plating Type:
0*-Sn-Au 1*-Ni 2*-Sn 3*-Matte-Tin 5*-Au
0A-Sn-Au 1u″ 0F-Sn-Au 10u″ 5A-Au 1u″
0B-Sn-Au 2u″ 0G-Sn-Au 15u″ 5B-Au 2u″
0C-Sn-Au 3u″ 0H-Sn-Au 30u″ 5C-Au 3u″
0D-Sn-Au 4u″ 0I-Sn-Au 40u″ ⋮
0E-Sn-Au 5u″ 0J-Sn-Au 50u″ 5J-Au 50u″

⑧ RoHS Request:
0:No Request
1:RoHS
2:HF(Halogen Free)

⑨ Customer Code

REV.	REVISION RECORD	DATE

UNIT: MM
SIZE: A4

GENERAL TOLERANCES	
LINEAR	ANGLES
0.0±0.25	X° REF±6°
0.00±0.15	X° ±3°
0.000±0.08	X° X'±2°

SCALE: 1:1	NAME	DATE
APPROVED		
DESIGNER		
DRAWN		

东莞市康导新能源科技有限公司
DONGGUANG KD NEW ENERGY TECHNOLOGY CO.,LTD.
Web: www.dgconne.com Tel: 0769-85337633
Email: 2850175986@qq.com Fax: 0769-85392827

TITLE:
Pitch2.54mm Female Header, Single Row, Plastic Height 7.5mm, DIP(U)

PART. NO: KDFH-0221
DWG. NO: ENDE1221
REV: A0
SHEET: 1/1