ROHS

For reference only

Pin数	尺寸A	尺寸B
1		2.0
2	2.0	4.0
3	4.0	6.0
4	6.0	8.0
5	8.0	10.0
6	10.0	12.0
7	12.0	14.0
8	14.0	16.0
9	16.0	18.0
10	18.0	20.0
11	20.0	22.0
12	22.0	24.0
13	24.0	26.0
14	26.0	28.0
15	28.0	30.0
16	30.0	32.0
17	32.0	34.0
18	34.0	36.0
19	36.0	38.0
20	38.0	40.0
21	40.0	42.0
22	42.0	44.0
23	44.0	46.0
24	46.0	48.0
25	48.0	50.0
26	50.0	52.0
27	52.0	54.0
28	54.0	56.0
29	56.0	58.0
30	58.0	60.0
31	60.0	62.0
32	62.0	64.0
33	64.0	66.0
34	66.0	68.0
35	68.0	70.0
36	70.0	72.0
37	72.0	74.0
38	74.0	76.0
39	76.0	78.0
40	78.0	80.0

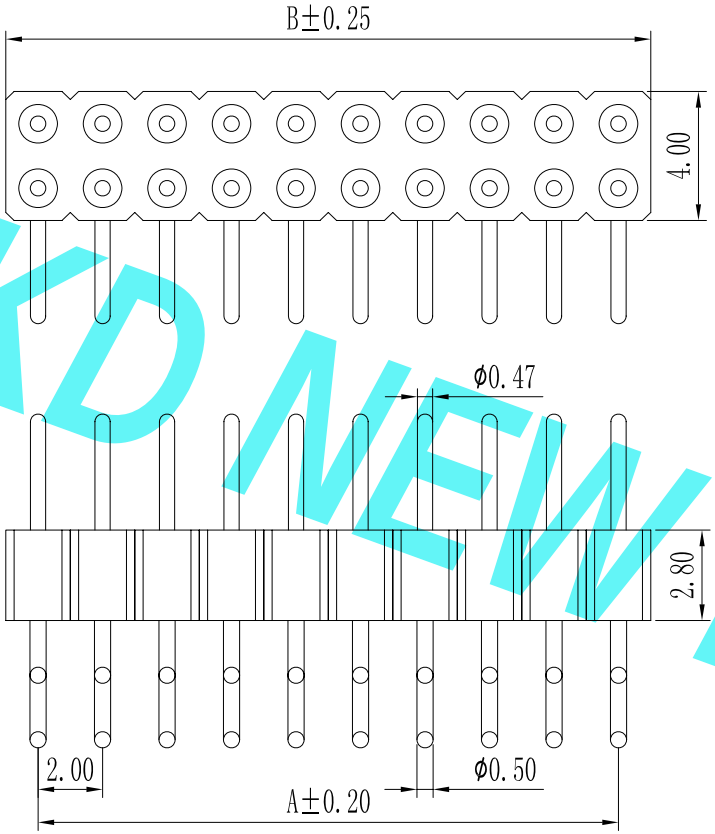

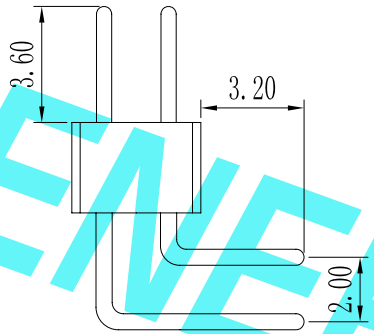

Specification:
Current Rating : 1.5AMP
Temperature Range : -40℃to+105℃
Contact Resistance : 20mΩ Max
Insulation Resistance : 1000MΩ Min
Withstanding Voltage : AC 500V
Material:
Insulator : Polyester (UL94V-0)
Standard:PBT/PA6T/LCP
Contact: Brass
Plating : Au or Sn Over 50u″ Ni

PCB LAYOUT

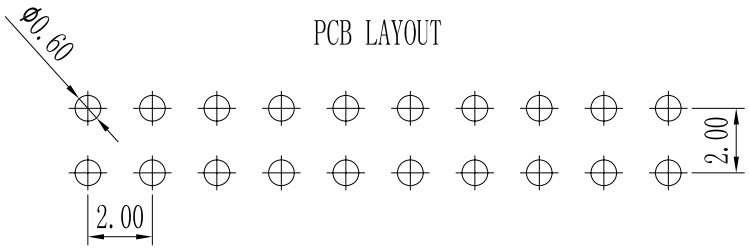

R 20 9D-XXX X X-XX-X-XXX
① ② ③ ④ ⑤ ⑥ ⑦ ⑧ ⑨

① Series No:
P=Pin Header
F=Female Header
B=Box Header
E=Ejector Header
R=Round Pin

② Pitch:
08=0.80
10=1.00
12=1.27
20=2.00
25=2.54
39=3.96
50=5.08

③ Tail&Mounting Style:
9D=Right Angle DIP Type
9S=Straight SMT Type
0D=Straight DIP Type
0S=Horizontal SMT Type

④ No. of Pins:
Single Row / Double Row
101=1*1Pin / 201=2*1Pin
102=1*2Pin / 202=2*2Pin
⋮ ⋮ / ⋮ ⋮
140=1*40pin / 240=2*40pin

⑤ Insulator Color:
A:Black B:Brown C:Red
D:Orange E:Yellow F:Green
G:Blue H:Violet J:Gray
K:White P:Light Blue

⑥ Material Type:
A-PBT
B-PA46
C-PA6T
D-PA9T
E-LCP

⑦ Plating Type:
0*-Sn-Au 1*-Ni 2*-Sn 3*-Matte-Tin 5*-Au
0A-Sn-Au 1u″ 0F-Sn-Au 10u″ 5A-Au 1u″
0B-Sn-Au 2u″ 0G-Sn-Au 15u″ 5B-Au 2u″
0C-Sn-Au 3u″ 0H-Sn-Au 30u″ 5C-Au 3u″
0D-Sn-Au 4u″ 0I-Sn-Au 40u″ ⋮
0E-Sn-Au 5u″ 0J-Sn-Au 50u″ 5J-Au 50u″

⑧ RoHS Request:
0:No Request
1:RoHS
2:HF(Halogen Free)

⑨ Customer Code

REV.	REVISION RECORD	DATE

UNIT: MM
SIZE: A4

GENERAL TOLERANCES	
LINEAR	ANGLES
0.0±0.25	X° REF±6°
0.00±0.15	X° ±3°
0.000±0.08	X° X'±2°

SCALE: 1:1	NAME	DATE
APPROVED		
DESIGNER		
DRAWN		

东莞市康导新能源科技有限公司
DONGGUANG KD NEW ENERGY TECHNOLOGY CO.,LTD.
Web: www.dgconne.com Tel: 0769-85337633
Email: 2850175986@qq.com Fax: 0769-85392827

TITLE:
Pitch2.00mm Round Pin, Dual Row,
Plastic Height 2.8mm, Right Angle Type

PART. NO: KDRH-0037
DWG. NO: ENDE4037
REV: A0
SHEET: 1/1

KD NEW ENERGY