环保物料

Reference Informations:
*Used in 43811 Receptacle Housing

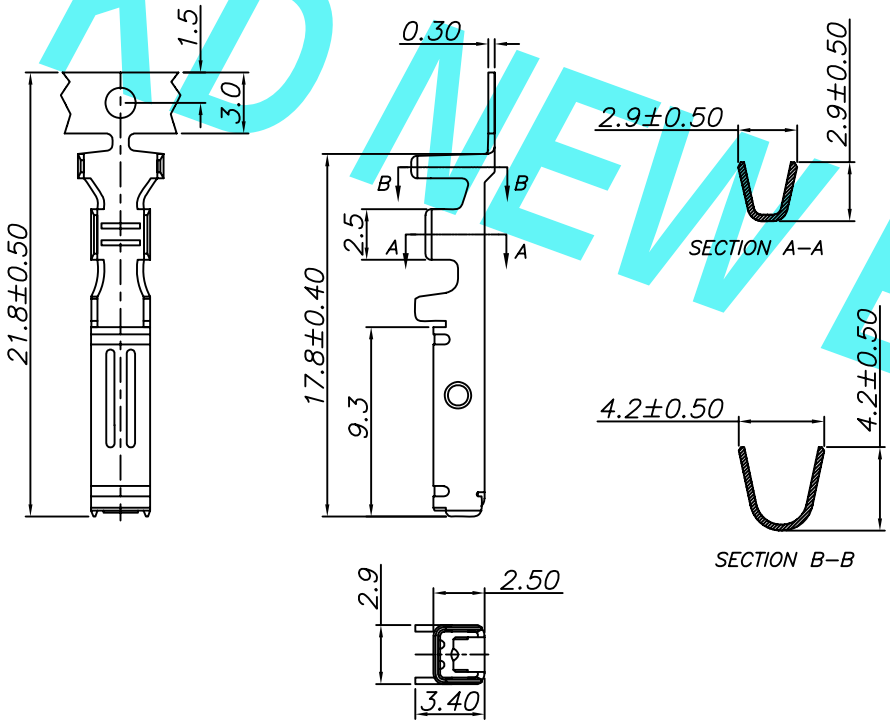

Ordering Information & Specifications

Part No	Wire Range	Insula-tion O.D.	Material	Finish
43811T0P-**	AWG#16-#20	1.25mm (max)	Phosphor Bronze	Au or Sn

Unit: mm

KD NEW ENERGY

				GENERAL TOLERANCES		SCALE: 1:1	NAME	DATE	东莞市康导新能源科技有限公司 DONGGUANG KD NEW ENERGY TECHNOLOGY CO.,LTD	PART. NO: 43811T0P-**
				LINEAR	ANGLES	APPROVED			公司网址: www.dgconne.cn 公司电话: 0769-85337633 邮箱: 2850175966@qq.com 公司传真: 0769-85392827	
				0.0±0.25	X° REF±6°	DESIGNER				DWG. NO: ENDE05
A0	新图面发行	2018.07.28	UNIT: MM	0.00±0.15	X° ±3°				TITLE: 3.81mm pitch Crimp Terminal	
REV.	REVISION RECORD	DATE	SIZE: A4	0.000±0.08	X° X'±2°	DRAWN	肖丽娟	2018.07.28		REV: A0 SHEET: 1/1