环保物料

Reference Informations:
**Material: Pin: Brass*
Wafer: Nylon & PBT, UL94V-0

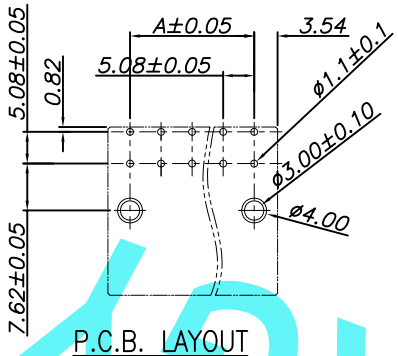

P.C.B. LAYOUT

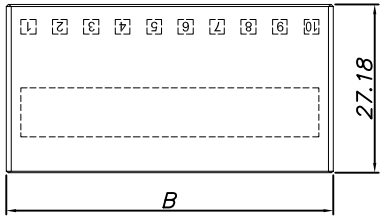

Dimensional Information:

Part No.	Dimensions A	Dimensions B
2*3P	5.08	12.16
2*6P	25.40	32.48
2*10P	45.72	52.80

Unit: mm

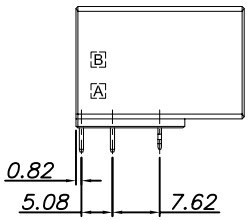

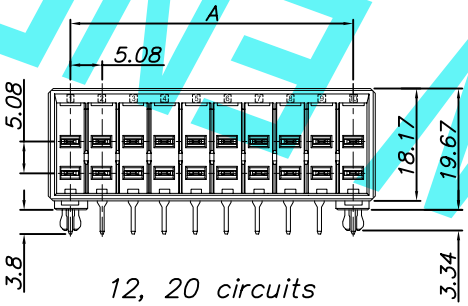

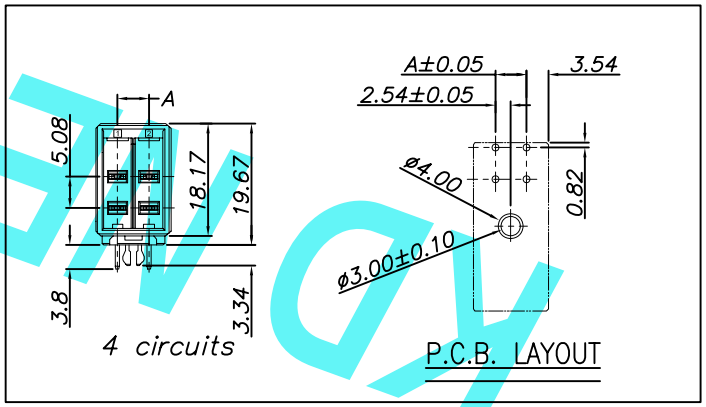

KD NEW ENERGY

				GENERAL TOLERANCES		SCALE: 1:1	NAME	DATE	东莞市康导新能源科技有限公司 DONGGUANG KD NEW ENERGY TECHNOLOGY CO.,LTD	PART. NO: 45083W90-NP*-A1-**
				LINEAR	ANGLES	APPROVED			公司网址：www.dgoonne.cn 公司电话：0769-85337633 邮箱：2850175966@qq.com 公司传真：0769-85392827	DWG. NO: ENDE05
				0.0±0.25	X° REF±6°	DESIGNER			TITLE: 5.08mm pitch Dual Wafer	
A0	新图面发行	2018.07.28	UNIT: MM	0.00±0.15	X° ±3°	DRAWN	肖丽娟	2018.07.28		REV: A0 SHEET: 1/1
REV.	REVISION RECORD	DATE	SIZE: A4	0.000±0.08	X° X'±2°					