环保物料

Reference Informations:
*Used in 34201 series Housing

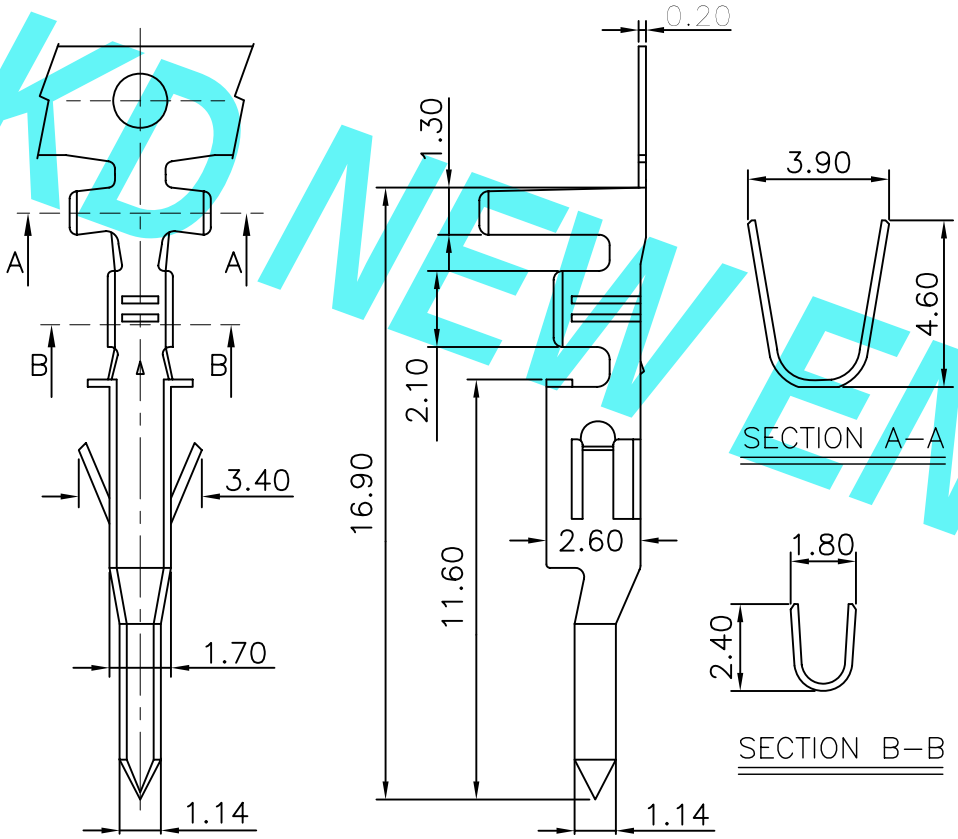

KD NEW ENERGY

Ordering Information & Specifications

Part No	Wire Range	Insula-tion O.D.	Material	Finish
34201T 0B-**	AWG#18 -#26	3.40mm (max)	Phosphor Bronze	Au or Sn

Unit: mm

				GENERAL TOLERANCES		SCALE: 1:1	NAME	DATE	东莞市康导新能源科技有限公司 DONGGUANG KD NEW ENERGY TECHNOLOGY CO.,LTD	PART. NO: 34201TOP-**	
				LINEAR	ANGLES	APPROVED			公司网址：www.dgconne.cn 公司电话：0769-85337633 邮 箱：2850175966@qq.com 公司传真：0769-85392827		
				0.0±0.25	X° REF±6°	DESIGNER				DWG. NO: ENDE05	
A0	新图面发行	2018.07.28	UNIT: MM	0.00±0.15	X° ±3°				TITLE: 4.20mm pitch Crimp Terminal		
REV.	REVISION RECORD	DATE	SIZE: A4	0.000±0.08	X° X'±2°	DRAWN	肖丽娟	2018.07.28		REV: A0	SHEET: 1/1